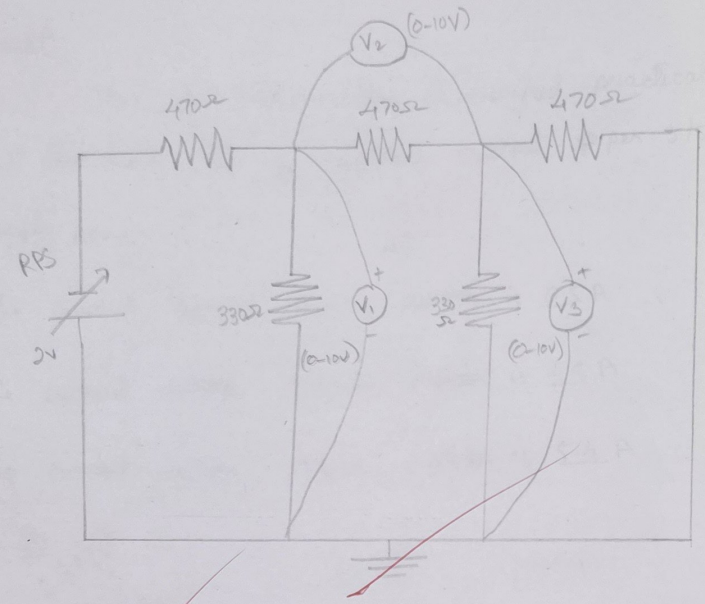

Ex No: 3
11/2/26

Aim

anal
circ

App

Sl No
1.
2.
3.
4.

Proc

* Gi
* Sw
* No
* Va
* Re
* Vs
an

Ex No: 3
11/2/26

DETERMINATION OF VOLTAGE IN CIRCUIT USING NODAL ANALYSIS

Aim:

To determine the voltage in circuit using nodal analysis both theoritically and practically for a given DC circuit

Apparatus required:

Sl No	Apparatus	Specifications	Qty
1.	Regulated power supply	(0-30V)	1
2.	Multimeter	–	1
3.	Resistor	470Ω, 330Ω	3, 2
4.	Bread board	–	1

Procedure:

* Give the connections
* Switch ON the supply, vary the RPS
* Note down the reading of ammeter and voltmeter
* Vary the RPS to its maximum value and switch OFF
* Reduce the RPS
* Using the tabulated value verify Kirchoff's law practically and theoretically.

Calculations:

Node A: $\frac{V_A - 2}{470} + \frac{V_A}{330} + \frac{V_A - V_B}{470} = 0$

$113V_A + 33V_B = 66 \rightarrow ①$

Node B: $\frac{V_B - V_A}{470} + \frac{V_B}{330} + \frac{V_B}{470} = 0$

$113V_A - 33V_B = 0 \rightarrow ②$

~~Node C~~

From ① & ②,

$V_B = 0.19V$

$V_A = 0.64V$

Marks split up:

Sl No	Description	Marks allocated	Marks obtained
1.	Experimental setup connection	20	20
2.	Observation/Reading	20	20
3.	Calculation / Result	20	10
4.	Viva	20	10
5.	Record	20	10
		Total	70

70

Result:

Thus the nodal analysis is verified practically and theoretically. The resultant voltage for 2V supply are:

a) The voltage V_1 is

b) The voltage V_2 is

c) The voltage V_3 is